REPUBLIC OF GAMERS

ROG NUC (2025)

NUC15JNK

User Guide

Regulatory Model: NUC15JNK

HDMI™
HIGH-DEFINITION MULTIMEDIA INTERFACE

E25459
First Edition
March 2025

COPYRIGHT INFORMATION

LIMITATION OF LIABILITY

Circumstances may arise where because of a default on ASUS' part or other liability, you are entitled to recover damages from ASUS. In each such instance, regardless of the basis on which you are entitled to claim damages from ASUS, ASUS is liable for no more than damages for bodily injury (including death) and damage to real property and tangible personal property; or any other actual and direct damages resulted from omission or failure of performing legal duties under this Warranty Statement, up to the listed contract price of each product.

ASUS will only be responsible for or indemnify you for loss, damages or claims based in contract, tort or infringement under this Warranty Statement.

This limit also applies to ASUS' suppliers and its reseller. It is the maximum for which ASUS, its suppliers, and your reseller are collectively responsible.

UNDER NO CIRCUMSTANCES IS ASUS LIABLE FOR ANY OF THE FOLLOWING: (1) THIRD-PARTY CLAIMS AGAINST YOU FOR DAMAGES; (2) LOSS OF, OR DAMAGE TO, YOUR RECORDS OR DATA; OR (3) SPECIAL, INCIDENTAL, OR INDIRECT DAMAGES OR FOR ANY ECONOMIC CONSEQUENTIAL DAMAGES (INCLUDING LOST PROFITS OR SAVINGS), EVEN IF ASUS, ITS SUPPLIERS OR YOUR RESELLER IS INFORMED OF THEIR POSSIBILITY.

SERVICE AND SUPPORT

Visit our multi-language website at https://www.asus.com/support/.

Contents

About this guide

This user guide includes information on the following NUC SKUs:

- **NUC Mini PC**
  (Memory and M.2 solid state drive(s) already included in the NUC system; Windows 11 Home Operating System included):
  Specifications and steps to set up your NUC Mini PC.

Audience

This user guide is intended to provide basic setup information about the NUC Mini PC and its components to the vendors, system integrators, and other engineers and technicians who need this level of information.

Conventions used in this guide

To highlight key information in this manual, some text are presented as follows:

IMPORTANT! This message contains vital information that must be followed to complete a task.

NOTE: This message contains additional information and tips that can help complete tasks.

WARNING! This message contains important information that must be followed to keep you safe while performing certain tasks and prevent damage to your NUC system's data and components.

Other Common Notation

#	Used after a signal name to identify an active-low signal (such as USBP0#)
GB	Gigabyte (1,073,741,824 bytes)
GB/s	Gigabytes per second
Gb/s	Gigabits per second
KB	Kilobyte (1024 bytes)
Kb	Kilobit (1024 bits)
kb/s	1000 bits per second
MB	Megabyte (1,048,576 bytes)
MB/s	Megabytes per second
Mb	Megabit (1,048,576 bits)
Mb/s	Megabits per second
TDP	Thermal Design Power
xxh	An address or data value ending with a lowercase h indicates a hexadecimal value.
x.x V	Volts. Voltages are DC unless otherwise specified.
x.x A	Amperes.

Production identification information

ASUSTeK NUC Product ROG NUC (2025) Identification Information

Product Name	ROG NUC (2025)
NUC15JNK	Mini PC

Where to find more information

Refer to the following sources for additional information and for product and software updates.

ROG website
The ROG website (rog.asus.com) provides updated information on ROG hardware and software products.

Safety and caution information

- Accessories that came with this product have been designed and verified for the use in connection with this product. Never use accessories from other products to prevent the risk of electric shock or fire.
- This device may interfere with the operation of some pacemakers, hearing aids or other medical devices. To reduce the risk, maintain a separation distance of 20cm (8 inches) between the device and the medical device. Refer to the medical device for additional information.
- Modification of the wireless solution, thermal solution, device components or enclosure shall violate regulatory compliance requirements and may induce safety hazards.

Risk of explosion if the battery is replaced with an incorrect type. Batteries should be recycled where possible. Disposal of used batteries must be in accordance with local environmental regulations.

Package contents

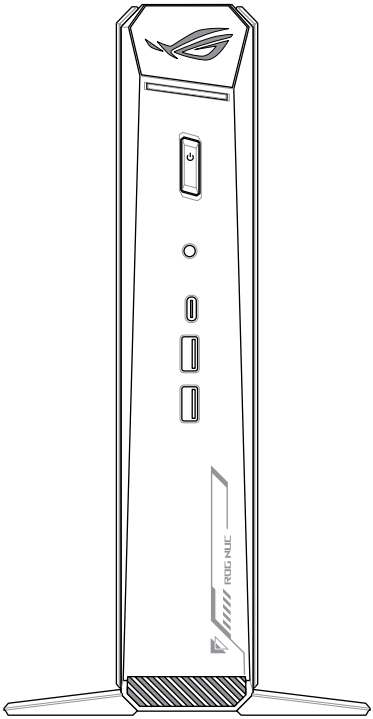

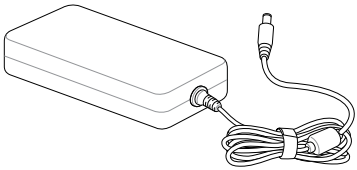

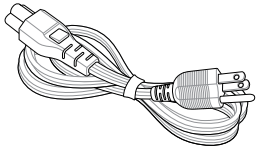

NOTE:

- The most up-to-date and accurate product specifications are available on rog.asus.com for download.
- Product and accessory images are for illustrative purposes only. The actual appearance and specifications may vary depending on the model.
- The bundled power adapter may vary depending on the model and the country (or region) of sale.
- The availability of the power cord may vary depending on the country (or region) of sale.
- Some bundled accessories may vary depending on the model. For details on these accessories, refer to their respective user manuals.
- If the device or its components fail or malfunction during normal and proper use within the warranty period, bring the warranty card to the ASUS Service Center for replacement of the defective components.
- The base of the system is fixed and cannot be removed.
- The system is not wall mountable.

IMPORTANT! Ensure to only use the system in a vertical orientation. Due to thermal conditions, we do not recommend placing or mounting the system in a horizontal orientation.

System overview

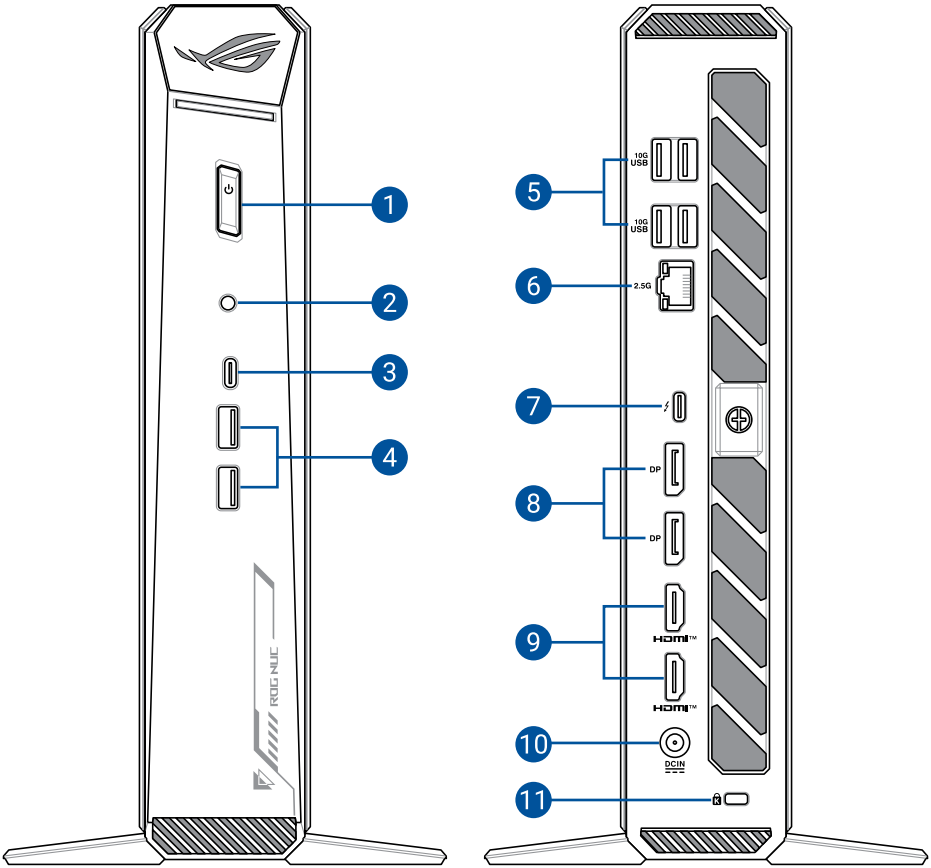

1 Power button

2 Headphone/Headset/ Microphone jack

3 USB 20Gbps Type-C® port

4 USB 10Gbps port

5 USB 10Gbps port

6 LAN Port

7 Thunderbolt™ 4 port

8 DisplayPort

9 HDMI™ port

10 Power input

11 Kensington security slot

Thunderbolt 4 / USB 4 (Type-C®) specifications:

Front

Feature	Details
Type-C® output support	USB20Gbps
Power over Type-C®	7.5W, 15W
Power profiles support	5V @ 3A and 5V @ 1.5A

Rear

Feature	Details
Type-C® output support	Thunderbolt 4 (40Gbps), native USB 4 (40Gbps), native DP2.1 (20Gbps)
Power over Type-C®	15W, 18W
Power profiles support	12V @ 1.5A, 9V @ 2A, and 5V @ 3A

NUC Mini PC setup guide

Connecting the display

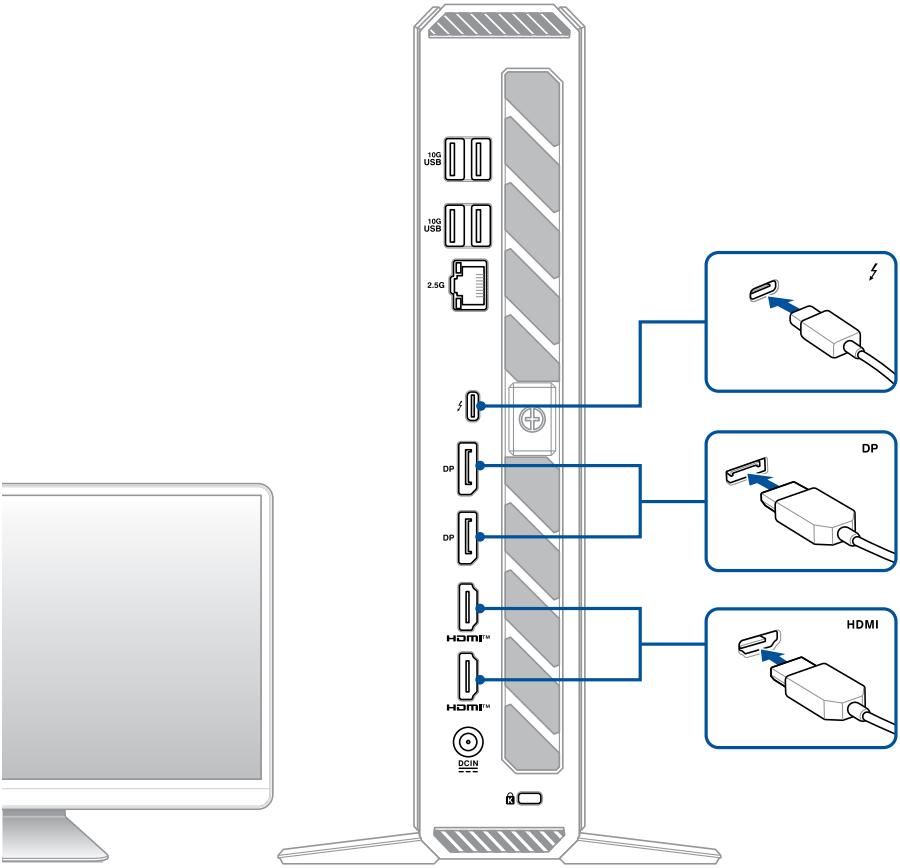

Display resolution table:

	HDMI 1	HDMI 2	DP 2 (2.1)	DP 2 (2.1)	TBT
HDMI 1 (FRL)	4K (3840 x 2160 @144Hz)	-	-	-	-
HDMI 2 (FRL)	-	4K (3840 x 2160 @144Hz)	-	-	-
DP1 (2.1)	-	-	4K (3840 x 2160 @144Hz)	-	-
DP2 (2.1)	-	-	-	4K (3840 x 2160 @144Hz)	-
TBT 4	-	-	-	-	8K (3840 x 2160 @30Hz)
Both DP1 & DP2	-	-	8K (7680 x 4320 @60Hz)		-

NOTE:

- High resolution/Multi-displays require sufficient memory bandwidth. Video playing or streaming in 4K or higher resolution requires dual channel memory configuration.
- Actual resolution may vary depending on devices and application changes.

Connecting the keyboard and mouse

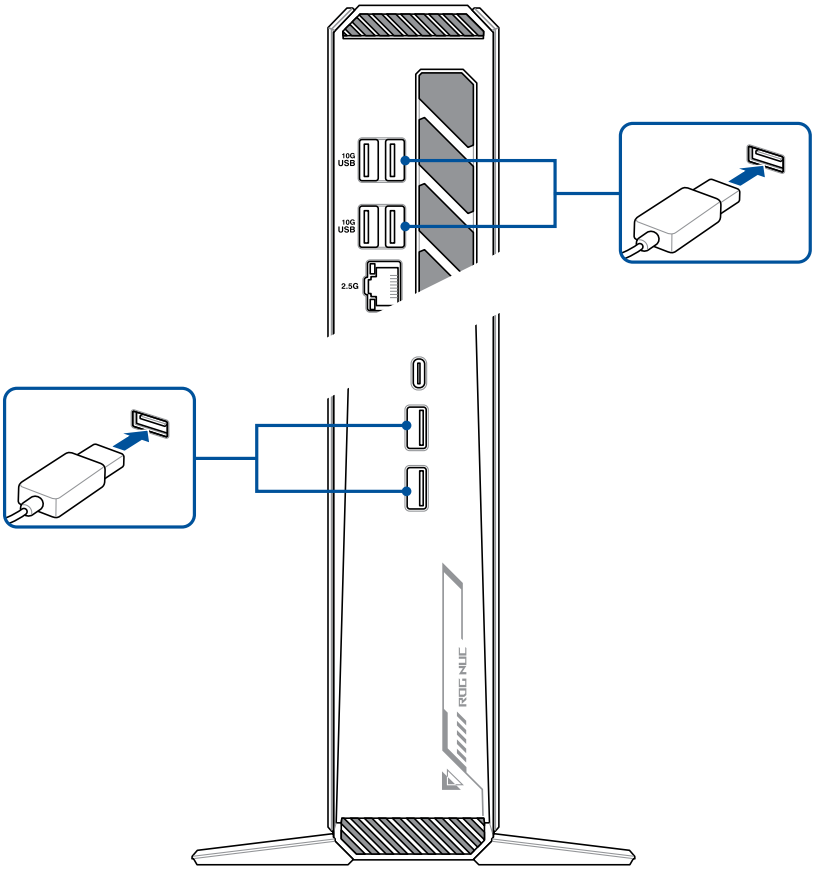

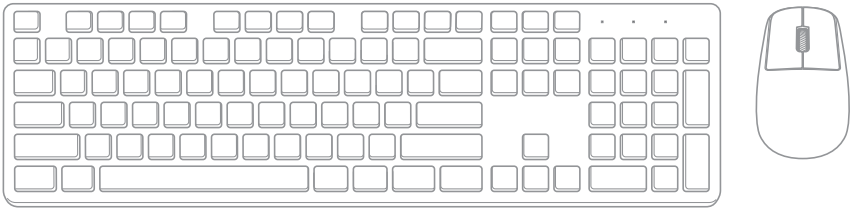

Connecting the LAN cable

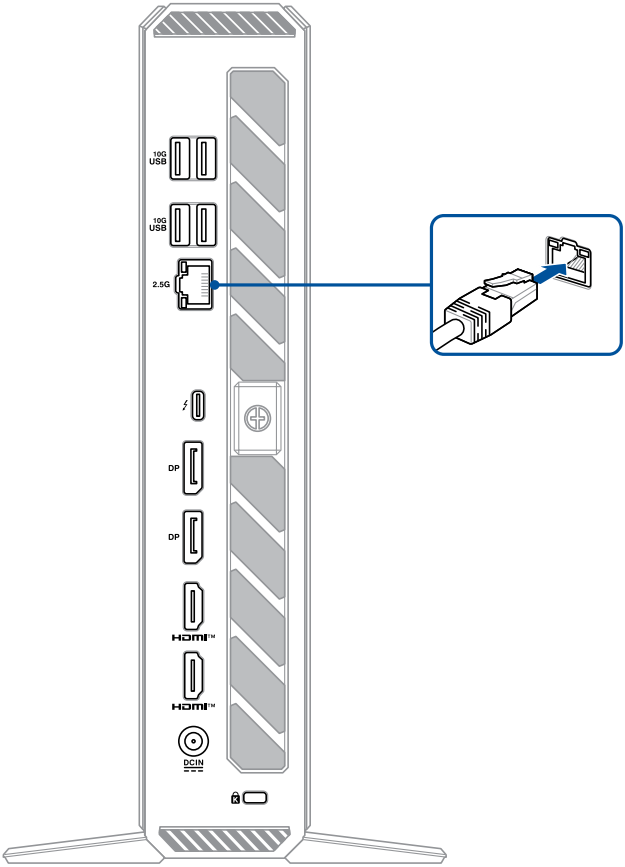

LAN port LED indications:

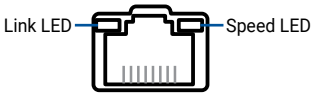

Link LED	
Status	Description
OFF	No link
GREEN	Linked
BLINKING	Data activity

Speed LED	
Status	Description
OFF	100 Mbps / 10 Mbps connection
YELLOW	1 Gbps connection
GREEN	2.5 Gbps connection

Connecting the power adapter

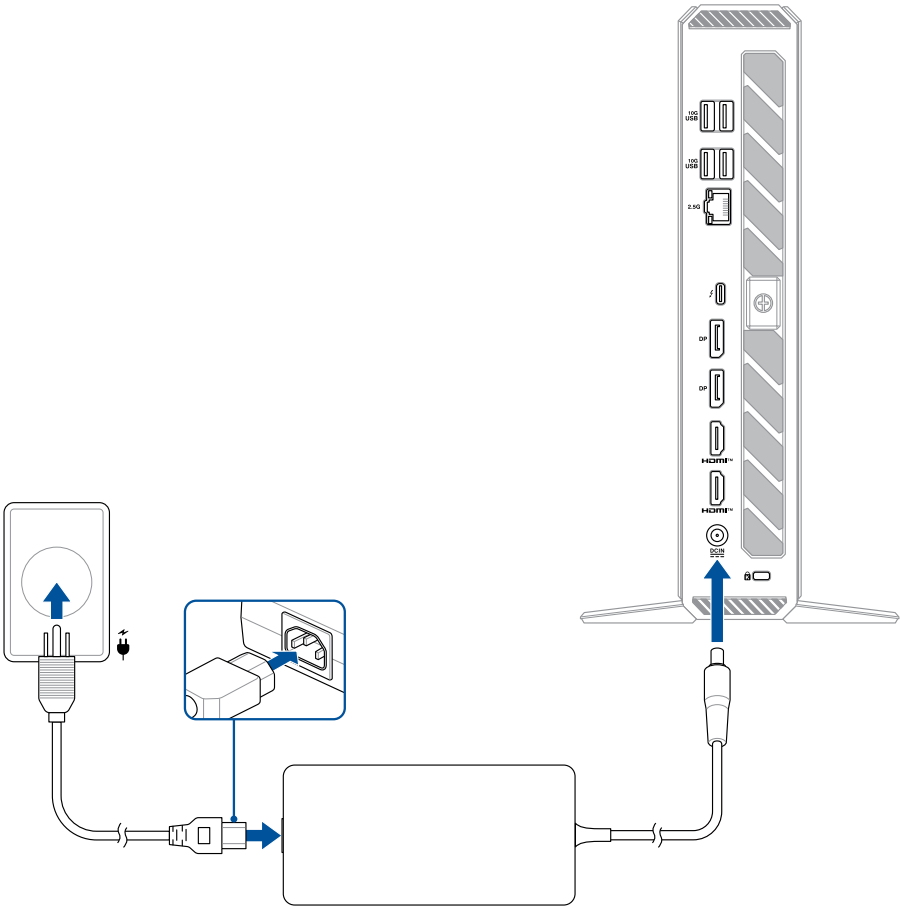

NOTE: Please refer to the following for more information on the adapter and the system:

330W Power adapter

- Input voltage: 100-240Vac
- Input frequency: 50-60Hz
- Output current: 16.92A (330.0W) / 16.9A (330.0W)
- Output voltage: 19.5Vdc
- Rated for use between 0°C and 35°C (32°F and 95°F)

System

- Rated input current: 16.9A (330.0W)
- Rated input voltage: 19.5Vdc
- Operating temperature: 0˚C to 35˚C (32°F and 95°F)

Plug	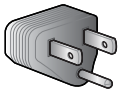	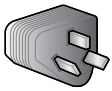	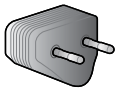
Code	US	CN	EU
Country	United States	China	European Union

Plug	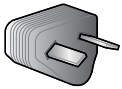	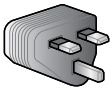	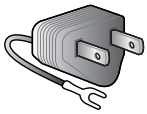
Code	AU	UK	JP
Country	Australia	United Kingdom	Japan (Type-A)

Powering on the system

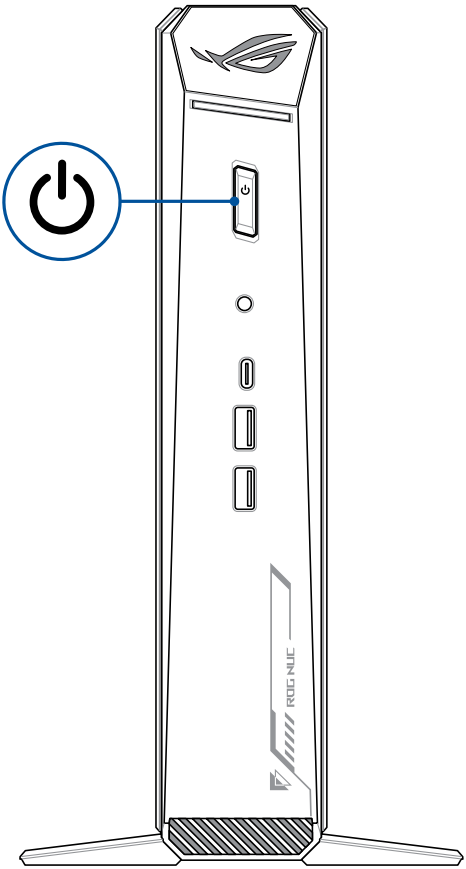

NOTE: To view the current power management settings in Windows® 11, click the **Start Button**. Type *Power Management*, then press <**Enter**>.

Default settings on a new system, as received, has the recommended settings (below) applied.

NOTE: This section only applies to the NUC Mini PC, and is not applicable to the NUC Kit or NUC Board.

BIOS settings

NOTE: Enter BIOS Setup by pressing **F2** during startup. If you're using this system at home, it is unlikely you will need to alter these settings.

- Fan mode - Set to Standard.
- After Power Failure - System stays off; press the power button to restart.
- Modern standby indicator - Power light on the front of the system will blink on and off. (This is sleep mode)
- Wake-on-LAN S5 - System will power up to a normal boot. (This is for IT departments)

Operating System Settings (Windows® 11)

- Turn Off the Display - 5 Minutes. (Your monitor will go blank)
- Put the Computer to Sleep - Within 5 minutes of user inactivity.

To Wake Your Computer

- To wake your system up from display sleep or HDD power off
- Put the Computer to Sleep - Within 5 minutes of user inactivity.

Managing power modes

Putting your NUC system to the Off mode with fast startup enabled

You can put your NUC system to the Off mode with fast startup enabled:

Enter **Control Panel** in the search bar and open it (**View by: Category**), select **Hardware and Sound** > **Power Options** > **Choose what the power button does**, click **Change settings that are currently unavailable**, select **Turn on fast startup (recommended)** and click **Save changes**.

- Launch the Start menu, select the power icon then select **Shut down** to do a normal shutdown.

  From the log-in screen, select the power icon then select **Shut down**.
- Press <alt> + <F4> to launch Shut Down Windows. Select **Shut down** from the drop-down list then select **OK**.

  If your NUC system is unresponsive, press and hold the power button for at least four (4) seconds until your NUC system turns off.

Putting your NUC system to sleep

You can put your NUC system to Sleep mode in two ways:

- Launch the Start menu, select the power icon then select **Sleep** to put your NUC system to sleep.
  From the log-in screen, select the power icon then select **Sleep**.
- Press <alt> + <F4> to launch Shut Down Windows. Select **Sleep** from the drop-down list then select **OK**.

NOTE: You can also put your NUC system to Sleep mode by pressing the power button once.

Putting your NUC system to the lowest power mode

You can put your NUC system to the lowest power mode by following the steps below:

1. Enter BIOS setup by pressing <F2> or <Del> during the boot process.
2. Enter Advanced Mode by pressing <F7>.

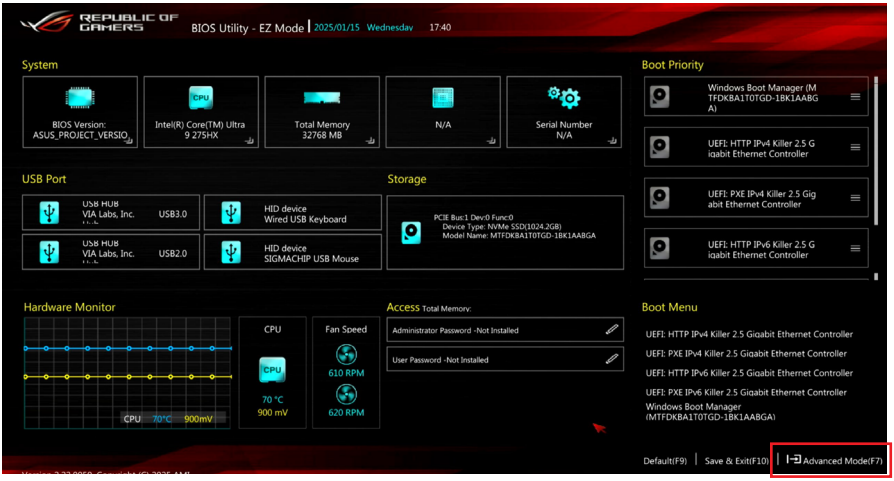

3. Go to **Power** > **Secondary Power Settings** > **ErP Ready**, and select **Enabled**.

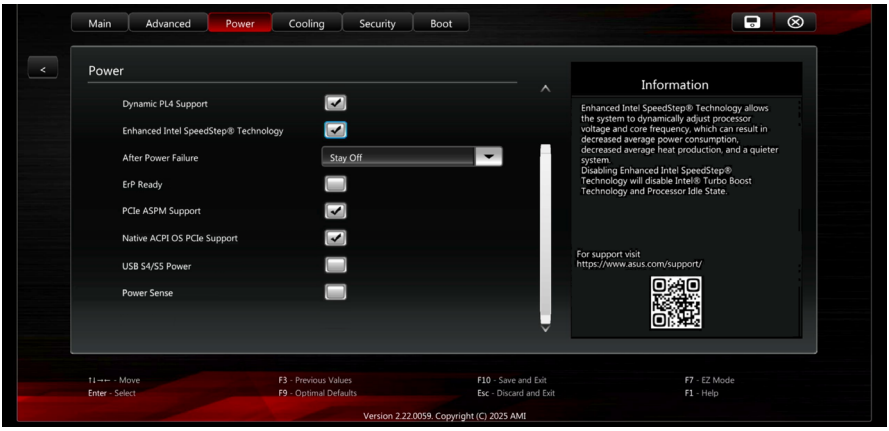

- Enter **Control Panel** in the search bar and open it (**View by: Category**), select **Hardware and Sound** > **Power Options** > **Choose what the power button does**, click **Change settings that are currently unavailable**, clear **Turn on fast startup (recommended)** and click **Save changes**.
- Launch the Start menu, select the power icon then select **Shut down** to do a normal shutdown.

  From the log-in screen, select the power icon then select **Shut down**.
- Press <alt> + <F4> to launch Shut Down Windows. Select **Shut down** from the drop-down list then select **OK**.

  If your NUC system is unresponsive, press and hold the power button for at least four (4) seconds until your NUC system turns off.

Enabling fast startup

You can shut down the your NUC system with fast startup enabled.

To enable fast startup in Shutdown settings:

Enter **Control Panel** in the search bar and open it (**View by: Category**), select **Hardware and Sound** > **Power Options** > **Choose what the power button does**, click **Change settings that are currently unavailable**, select **Turn on fast startup (recommended)** and click **Save changes**.

NOTE: If fast startup is disabled, when you shut down the your NUC system, it shuts down to the S5 power state.

NUC component integration guide

IMPORTANT! ASUS is not responsible for direct, indirect, intentional or unintentional damages resulting from improper installation and operation.

NOTE: The illustrations in this section are for reference only. The chassis may vary between models, but the installation/removal steps remain the same.

Safety precautions

- This device is intended for use in ambient temperatures between 0°C and 35°C (32°F and 95°F). Avoid using or storing next to heat sources, in direct sunlight, or outside the intended temperature ranges.
- Do not use this product near water or a heated source.
- Openings on the chassis are for ventilation. Do not block or cover these openings. Make sure you leave plenty of space around the system for ventilation. Never insert objects of any kind into the ventilation openings.
- Use this product in environments with ambient temperatures between 0˚C and 35˚C.
- Failure to use the included power adapter shall violate regulatory compliance requirements and may expose the user to safety hazards.
- Risk of electric shock, fire, or burn if using an AC adapter other than the one provided with this device. Indoor use only and in dry locations. The adapter is rated for use between 0°C and 35°C (32°F and 95°F).
- If you use an extension cord, make sure that the total ampere rating of the devices plugged into the extension cord does not exceed its ampere rating.
- The power supply cord must be plugged into a socket or outlet that is provided with a suitable earth ground.
- This equipment should be installed and operated with a minimum distance of 20cm between the radiator and your body.
- Do not install this equipment at a height exceeding 2 meters

Care during use

- Do not walk on the power cord or allow anything to rest on it.
- Do not spill water or any other liquids on your system.
- When the system is turned off, a small amount of electrical current still flows. Always unplug the power cord from the power outlets before cleaning the system.
- If you encounter the following technical problems with the product, unplug the power cord and contact a qualified service technician or your retailer.
  - The power cord or plug is damaged.
  - Liquid has spilled into the system.
  - The system does not function properly even if you follow the operating instructions.
  - The system was dropped, or the cabinet is damaged.
  - The system performance changes.
- Avoid contact with hot components inside the Mini PC. During operation, some components become hot enough to burn the skin. Before you open the computer cover, turn off the computer, disconnect the power, and wait approximately 30 minutes for the components to cool.
- Disposal of a battery into fire or a hot oven, or mechanically crushing or cutting of a battery, that can result in an explosion.
- Leaving a battery in an extremely high temperature surrounding environment that can result in an explosion or the leakage of flammable liquid or gas.
- A battery subjected to extremely low air pressure that may result in an explosion or the leakage of flammable liquid or gas.

Before you begin

1. Read the entire manual before starting any service procedures and follow all instructions.
2. Back up your NUC system.
3. Turn off your NUC system.
4. Place your NUC system on a stable surface.
5. Disconnect all connected peripherals and cables.

IMPORTANT!

- Purchase replacement components from an authorized retailer of this NUC system to ensure maximum compatibility and reliability.
- Refer to https://rog.asus.com for a list of compatible components.

NOTE:

- The illustrations are for reference only.
- Product and component images are for illustrative purposes only. The actual appearance and specifications may vary depending on the model.
- Keep all adhesive tape, insulating materials, screws, and other removable items in a safe place until the service procedure is completed, as they may be needed during installation.

Opening system

1. Completely loosen the thumbscrew securing the main cover.

2. Push the main cover towards the rear of the system until it disengages from the system.

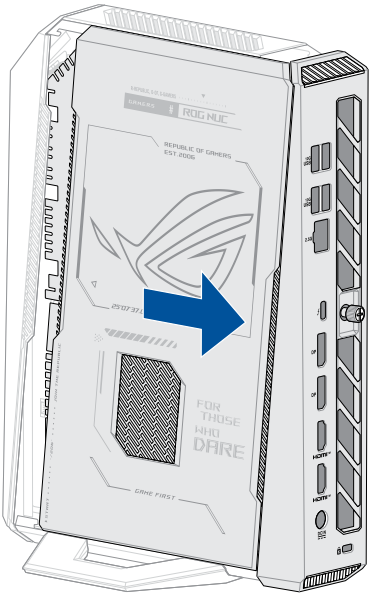

3. Gently lift and flip the main cover over in the direction shown in the illustration below.

NOTE: Do not use excessive force when lifting or flipping the main cover over, doing so may cause damages to the cable connecting the LED panel on the main cover to the inner board.

4. Disconnect the cable from the LED connector.

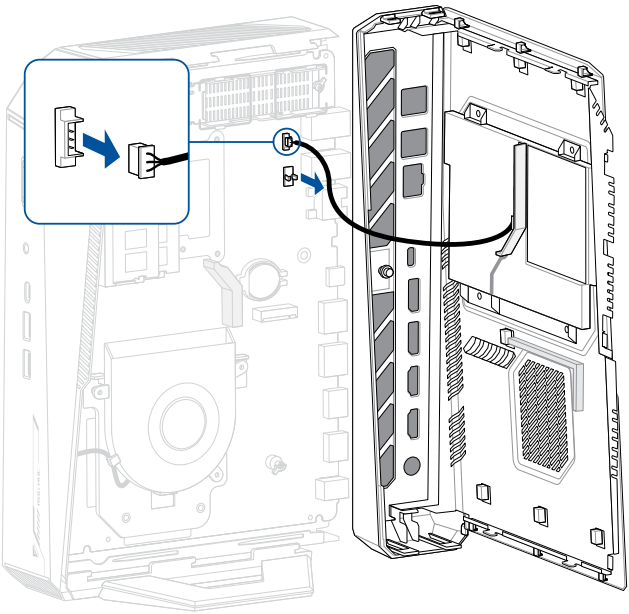

DDR5 CSODIMM installation

To install memory, be sure to select memory modules that meet these requirements:

- 1.1V low voltage memory
- DDR5 6400 MHz CSODIMMs
- Non-ECC
- Up to 96 GB of system memory with two CSODIMMs using 48 GB memory modules

Find compatible and validated memory modules in the ASUS Qualified Vendor List at rog.asus.com/support.

NOTE: 2 Gb, 4 Gb, and 8 Gb memory technology (SDRAM Density) is not supported.

1. Align the small space at the bottom edge of the DDR5 CSODIMM with the key on the SO-DIMM slot, then insert the DDR5 CSODIMM into the SO-DIMM slot.
2. Push the DDR5 CSODIMM down until the retaining clips clicks into place.

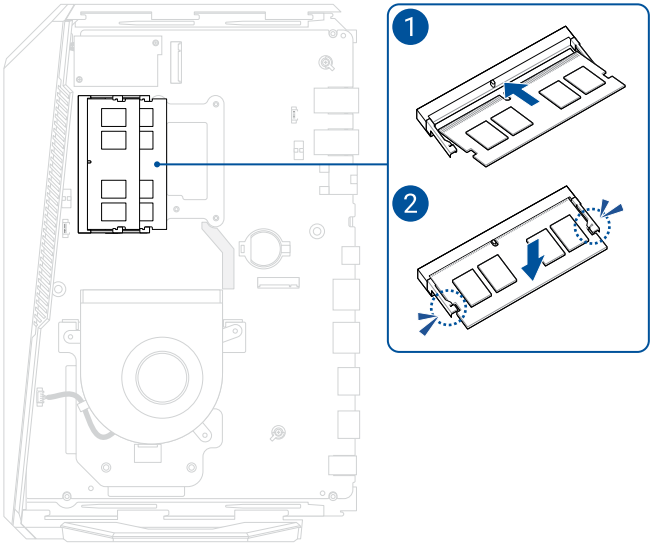

M.2 installation

This system supports the following:

- One M.2 PCIe Gen5x4 connector supporting M.2 22x80 (key type M) for NVMe SSD.
- One M.2 PCIe Gen4x4 connector supporting M.2 22x80 (key type M) for NVMe SSD.
- One M.2 slot supporting M.2 22x30 (key type E) for Wi-Fi modules

Find compatible and validated M.2 modules in the ASUS Qualified Vendor List at www.asus.com/support.

2280 M.2 bracket

A 2280 M.2 bracket comes installed in your system, we recommend installing the PCIe Gen5x4 M.2 SSD to the bracket before installing the PCIe Gen5x4 M.2 SSD to the system.

1. Push the wires out from under the hooks on both sides of the 2280 M.2 bracket to release the heatsink cover.

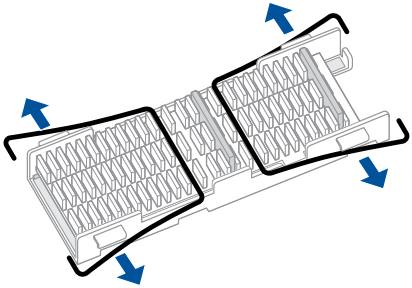

2. Lift and remove the heatsink cover.

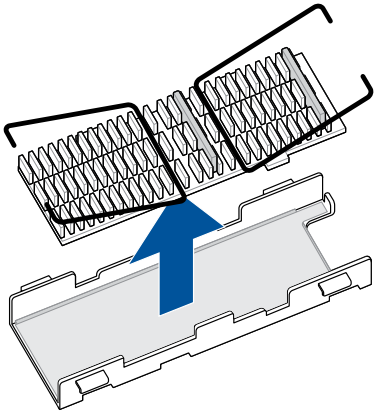

3. Remove the plastic film on the thermal pad on the casing of the M.2 2280 bracket.
4. Place your M.2 SSD into the casing.

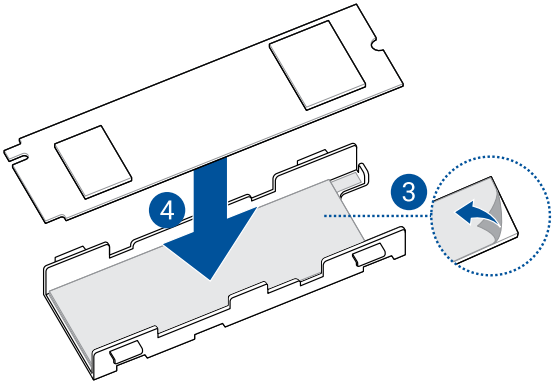

5. Remove the plastic film on the thermal pad on the heatsink cover.
6. Align and place the heatsink cover into the casing.

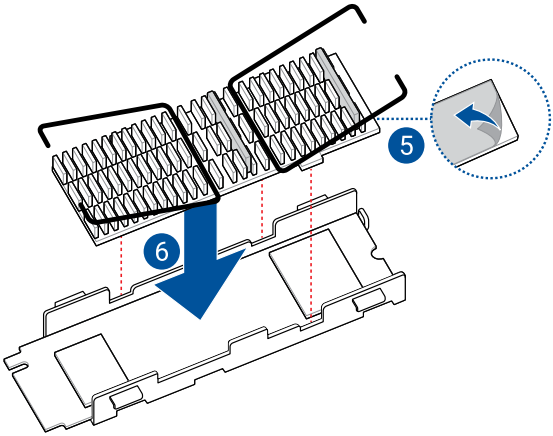

7. Push the wires into the hooks on both sides of the 2280 M.2 bracket to secure the heatsink cover.

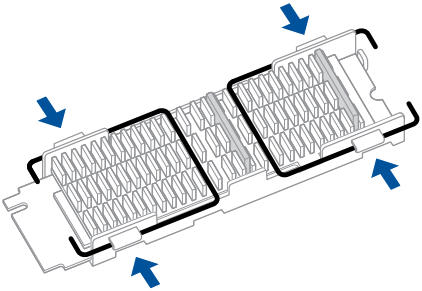

2280 M.2

1. Insert the M.2 module into the M.2 slot on the system board.
2. Rotate the Q-Latch counterclockwise to secure the M.2 module in place.

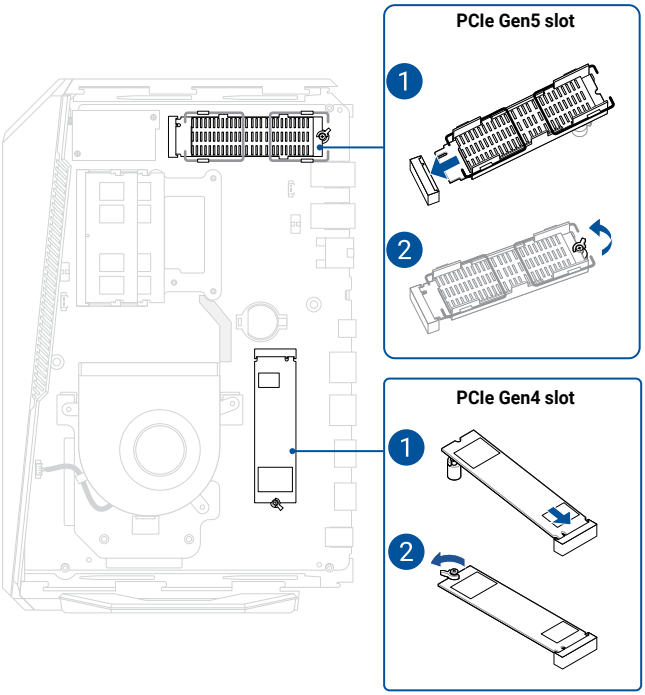

2230 M.2

1. Insert the M.2 module into the M.2 slot on the system board.
2. Secure the M.2 module in place using a screw.
3. (Optional) Connect the antennas to your M.2 module.

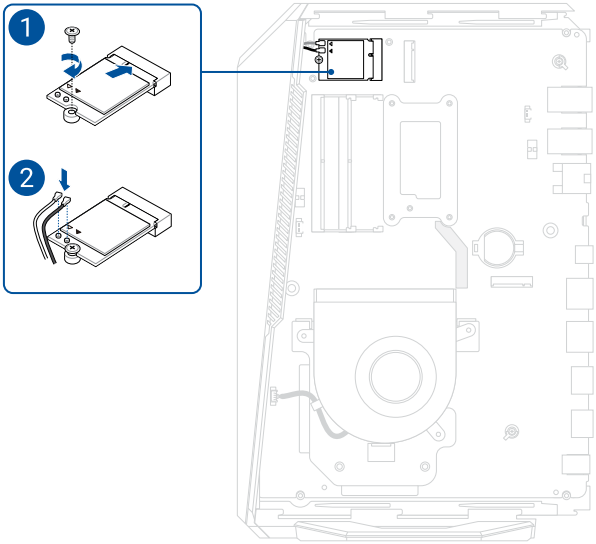

4. Place the wireless card shield over the M.2 module, and secure it using two (2) screws.

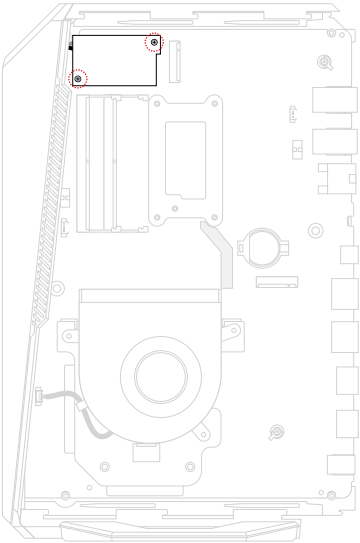

Closing system

1. Connect the cable from the LED connector on the main cover to the inner board.

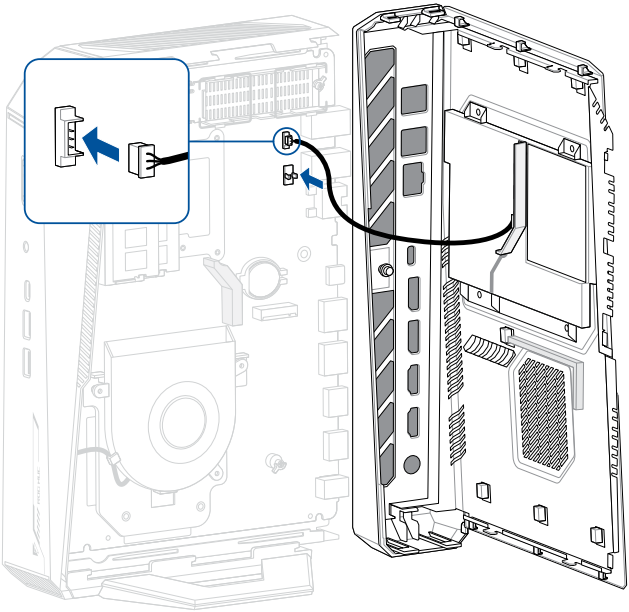

2. Align the main cover to the system chassis, then push the main cover towards the front of the system. Make sure the rear IO openings are properly aligned to the rear IO ports.

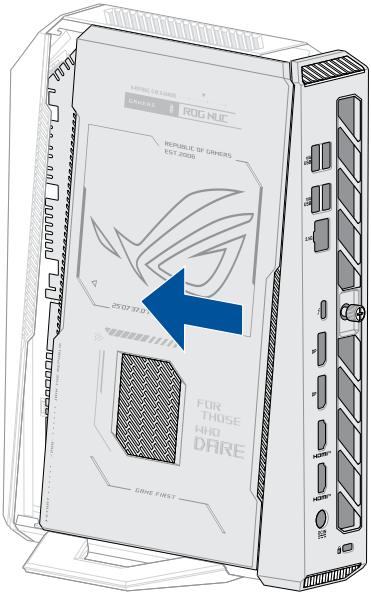

3. Secure the main cover by tightening the thumbscrew.